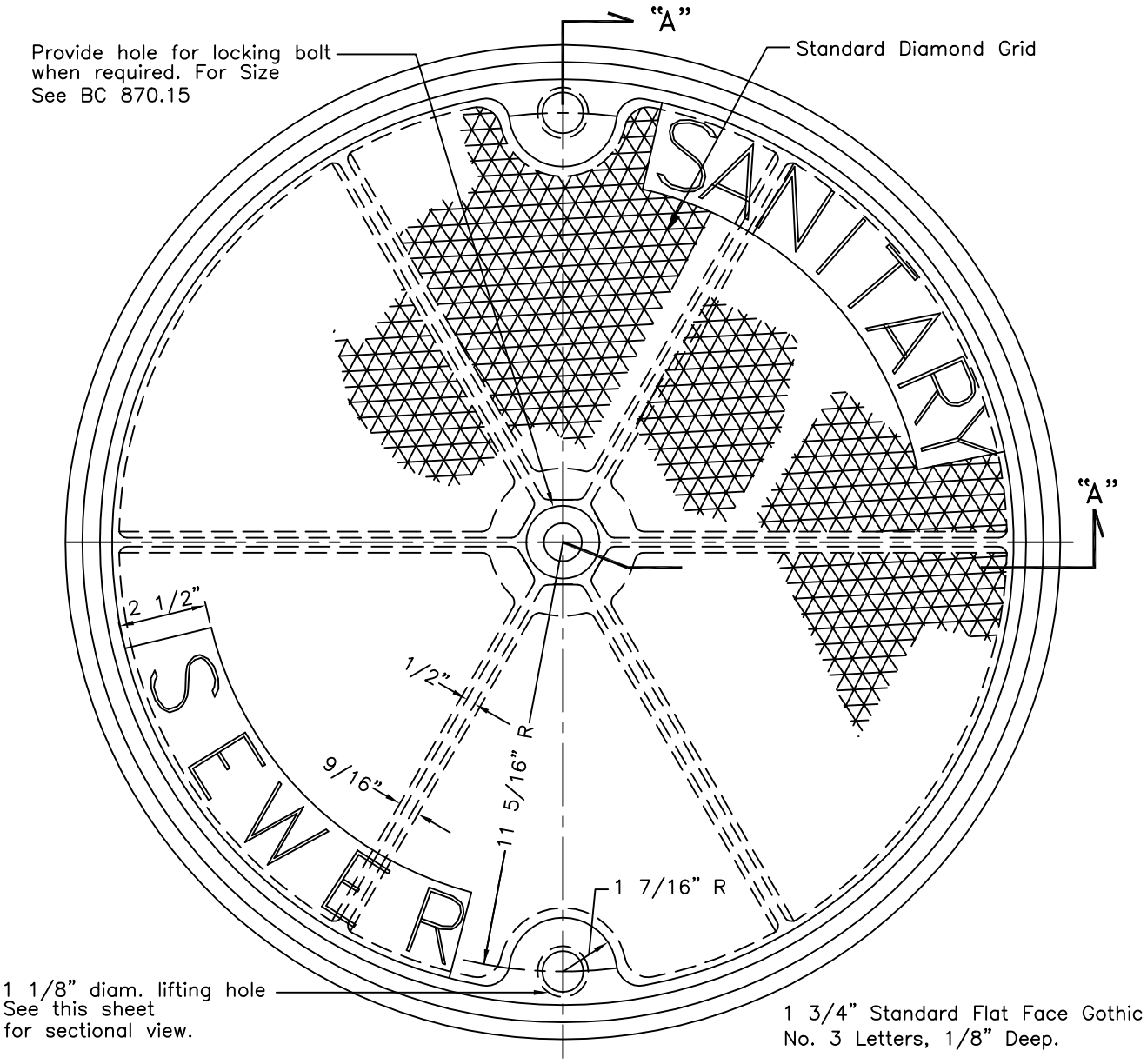

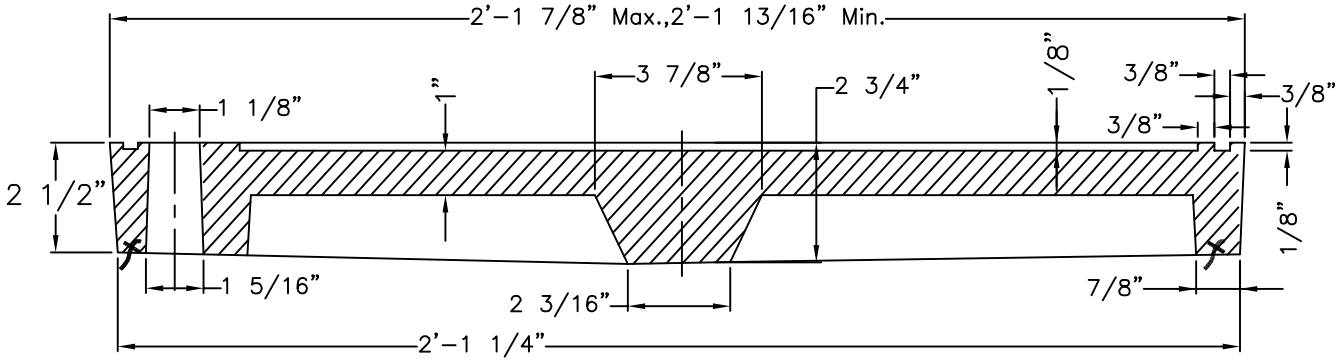

For Std. 24" Manhole Frame
See BC 831.25

SECTION "A-A"

CITY OF BALTIMORE 1797	APPROVED : HEAD, BUREAU OF WATER AND WASTEWATER DIRECTOR, DEPARTMENT OF PUBLIC WORKS	CITY OF BALTIMORE DEPARTMENT OF PUBLIC WORKS BUREAU OF WATER AND WASTEWATER	ISSUED	REVISED	REVISED
			3 / 2008		
		STANDARD SAN 24 IN. MANHOLE COVER	STANDARD NO. BC 831.24		
			SCALE : NONE	SHEET 1 OF 1	