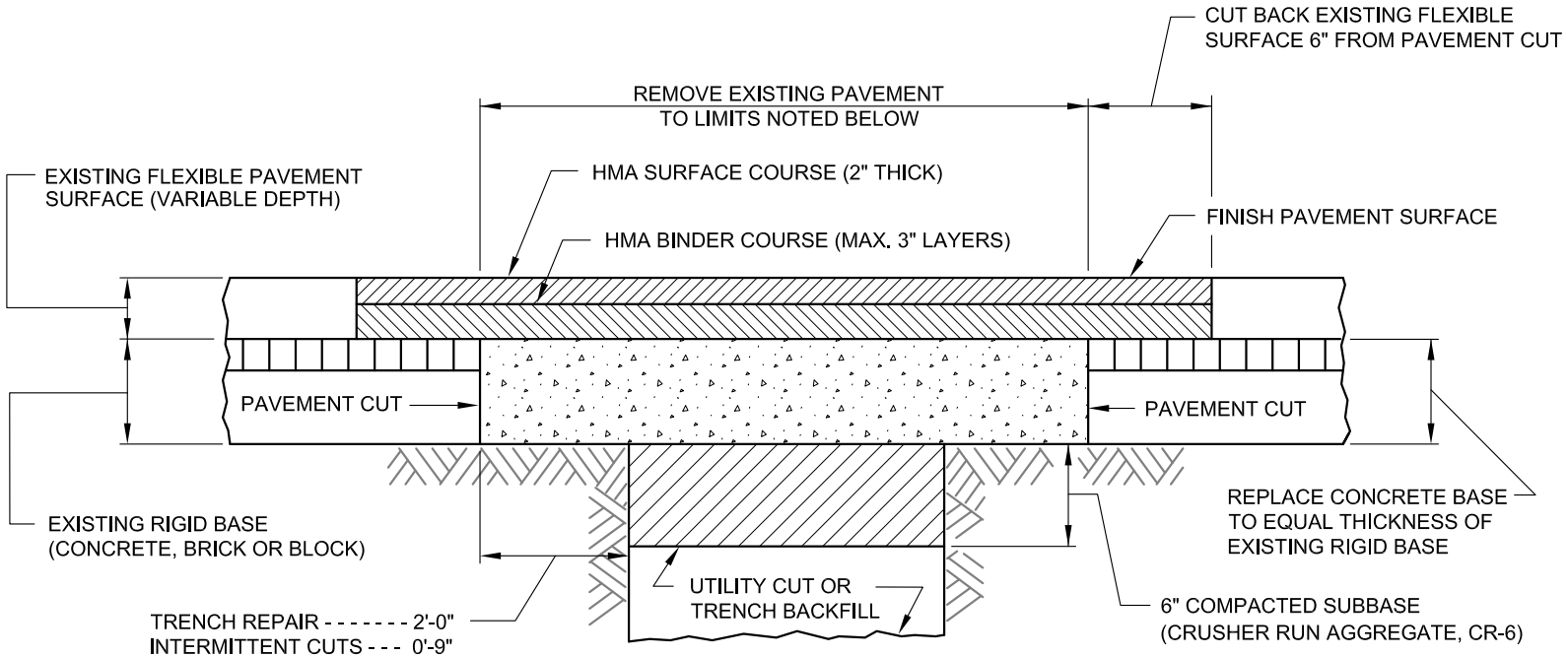

TRENCH REPAIR AND INTERMITTENT UTILITY CUTS

THIS DETAIL IS APPLICABLE TO THE REPAIR OF TRENCHES AND INTERMITTENT UTILITY CUTS IN EXISTING PAVEMENT HAVING A FLEXIBLE SURFACE AND A RIGID BASE.

SEE STANDARD BC 576.20-2 FOR CONSTRUCTION NOTES AND OTHER REQUIREMENTS.

CITY OF BALTIMORE 1797

APPROVED:

DIVISION CHIEF, TRANSPORTATION ENGINEERING AND CONSTRUCTION

DIRECTOR, DEPARTMENT OF TRANSPORTATION

CITY OF BALTIMORE
DEPARTMENT OF TRANSPORTATION
TRANSPORTATION ENGINEERING AND CONSTRUCTION

STREET CUT AND REPAIR
FLEXIBLE SURFACE
RIGID BASE

ISSUED	REVISED	REVISED
8 / 2010		

STANDARD NO.
BC 576.20-1

SCALE : NONE

SHEET 1 OF 2