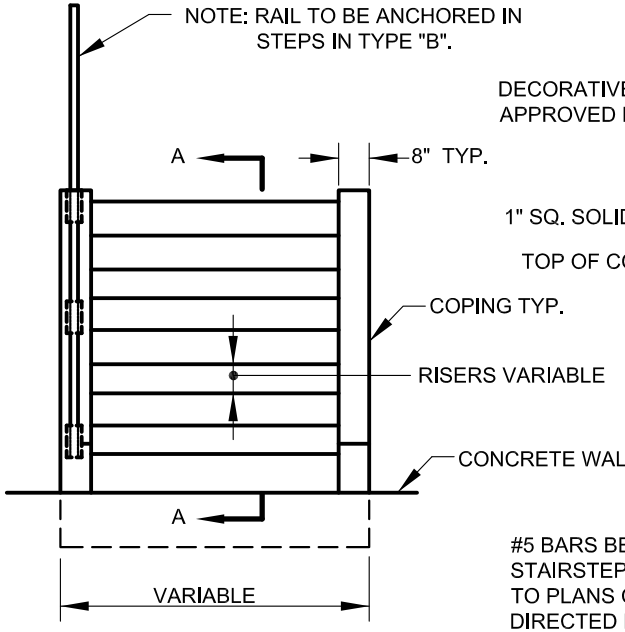

FRONT VIEW

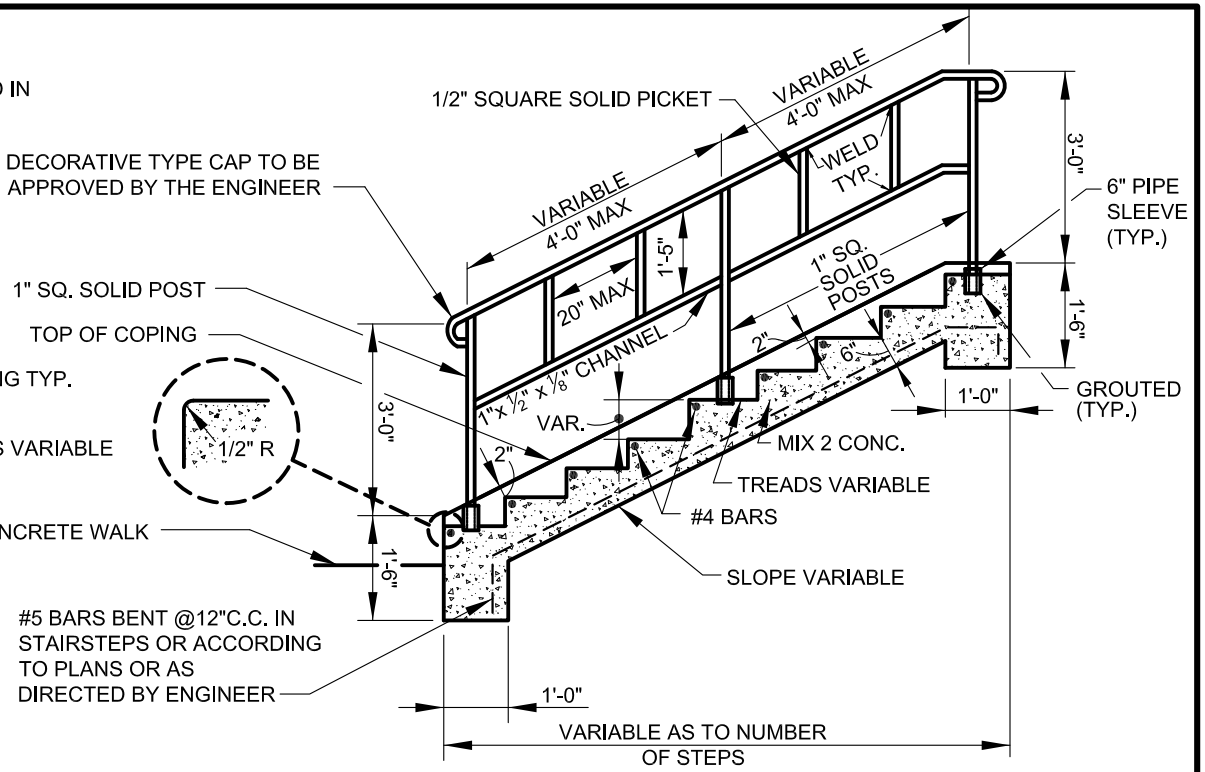

SECTION A-A

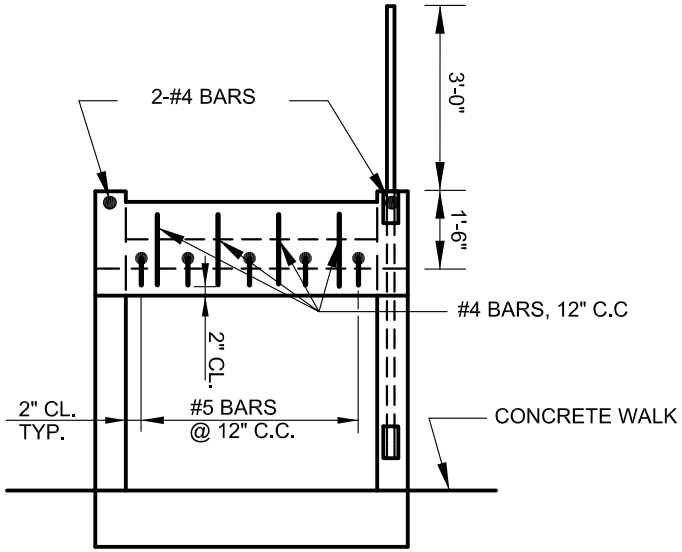

BACK VIEW

NOTES

1. STEEL SHALL CONFORM TO ASTM DESIGNATION A-36 OR 1020 MERCHANT GRADE.
2. CONCRETE STAIRSTEPS, TYPE "A", SHALL BE CONSTRUCTED WITH COPING (AS SHOWN ABOVE).
3. CONCRETE STAIRSTEPS, TYPE "B", SHALL BE CONSTRUCTED WITHOUT COPING.
4. THE ORNAMENTAL IRON RAILING SHALL BE INSTALLED ON STEPS WHERE THE VERTICAL RISE REACHES OR EXCEEDS FORTY-TWO (42) INCHES, AND AT OTHER LOCATIONS AS DIRECTED BY THE ENGINEER.
5. ALL RAILING SHALL HAVE ONE (1) PRIME COAT AND ONE (1) FINISH COAT OF BLACK EQUIPMENT ENAMEL PAINT OR APPROVED EQUAL. RAILING MEMBERS TO BE WELDED ACCORDING TO PLANS OR MANUFACTURER SPEC.

SLOPE	RISER	TREAD
1-1/2:1	7"	10-1/2"
2:1	6"	12"
4:1	4"	16"

CITY OF BALTIMORE 1797

APPROVED:

DIVISION CHIEF, TRANSPORTATION ENGINEERING AND CONSTRUCTION

DIRECTOR, DEPARTMENT OF TRANSPORTATION

CITY OF BALTIMORE
DEPARTMENT OF TRANSPORTATION
TRANSPORTATION ENGINEERING AND CONSTRUCTION

CONCRETE STAIRSTEPS AND ORNAMENTAL IRON RAILINGS

ISSUED	REVISED	REVISED
8 / 2010		

STANDARD NO. BC 656.01

SCALE : NONE

SHEET 1 OF 1